Dylan Thornburg

SANTA CLARA UNIVERSITY	ELEN 153 Spring 2025	Dr. S. Krishnan
Lab 2: MOSFET characteristics		

I. OBJECTIVES

- To study the MOSFET i-v characteristics
- To study a MOSFET as a switch

II. LAB PROCEDURE

Part 1: MOSFET I-V curves

A. Synopsys Tutorial Follow pages 5-20 of the Synopsys Custom Compiler Part 1: Schematics and Simulations, in order to run Synopsys tools.

Schematics for I-V curves

W = 5µm, L = 0.25µm.

Figure 1(a)

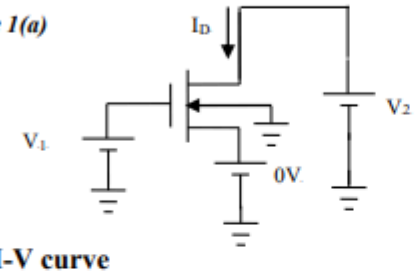

Figure 1(b)

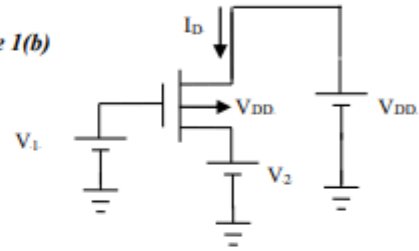

B. NMOS I-V curve

(a) Draw the MOS circuit given in Figure 1(a). Connect the bulk terminal to GND.
(b) Edit the MOSFET model for model parameters W=5µm, L=0.25µm.
(c) Set the voltage source V_1 to have the voltages 0V,0.25V.0.5V.0.75V,1V and 1.2V.
(d) Set the voltage source V_2 to sweep from 0V to 1.2V in steps of 0.001V.
(e) Plot the MOSFET drain current on the y axis with the voltage V_2 on the x-axis. Plot for various gate voltages V_1.

C. PMOS I-V curve

(a) Draw the MOS circuit given in Figure 1(b). Connect the bulk terminal to VDD.
(b) Edit the MOSFET model for model parameters W=5µm, L=0.25µm.
(c) Connect VDD to a DC voltage source of 1.2V.
(d) Set the voltage source V_1 to have the voltages 0V,0.25V.0.5V.0.75V,1V and 1.2V.
(e) Set the voltage source V_2 to sweep from 0V to 1.2V in steps of 0.001V.
(f) Plot the MOSFET drain current on the y axis with the voltage V_2 on the x-axis. Plot for various gate voltages V_1.

TA Check Point: Complete Part 1 and demo the results to your TA

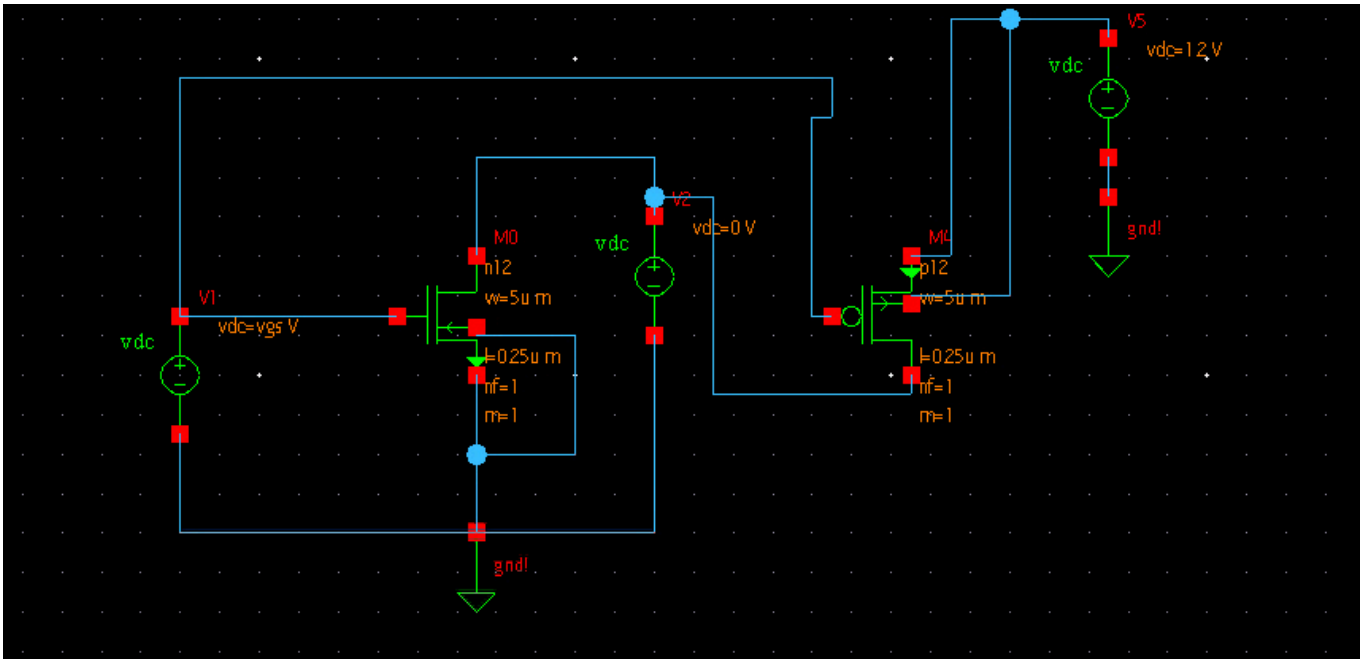

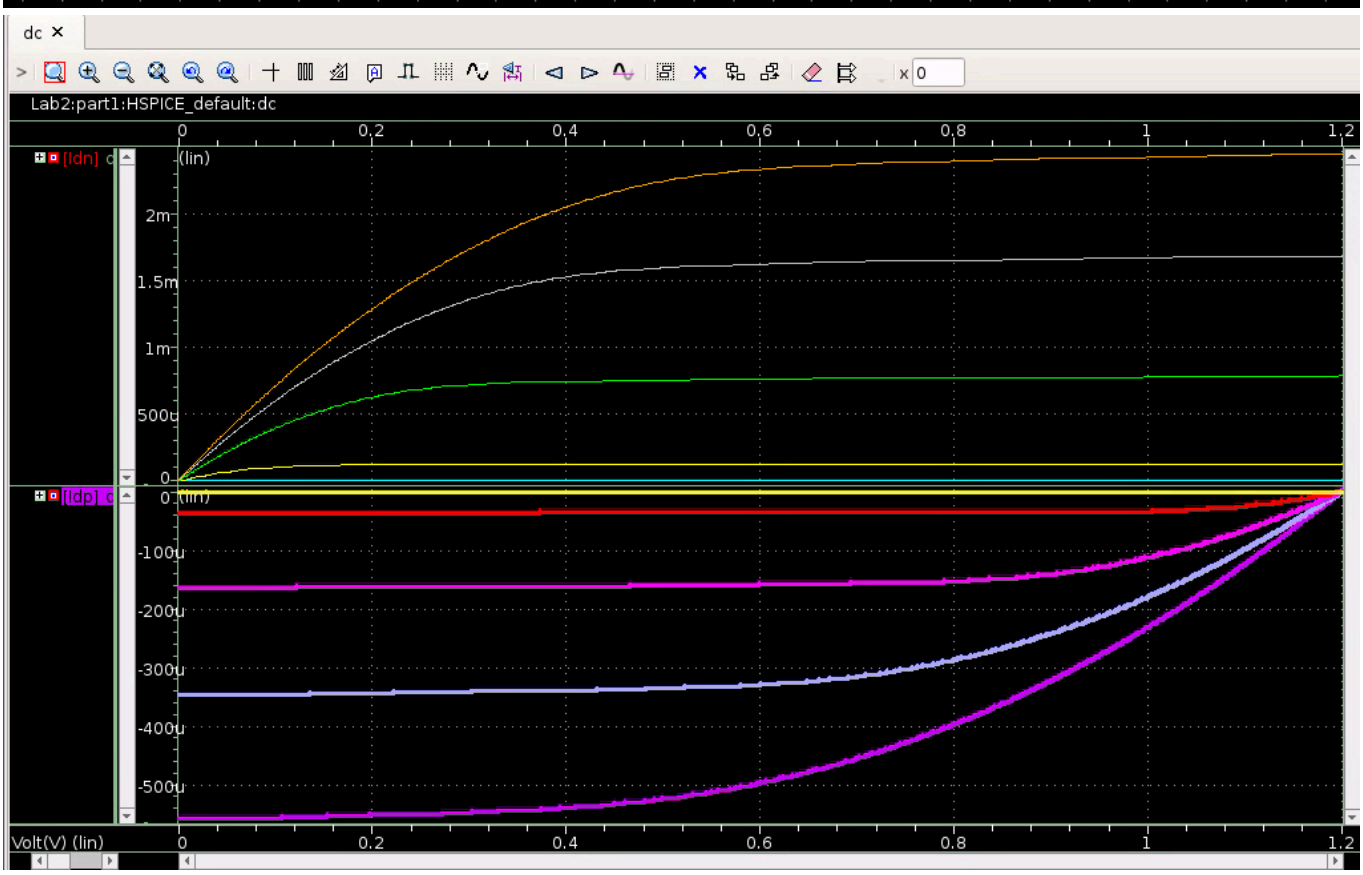

Questions:

(a) How do the NMOS I-V curve differ from the PMOS I-V curve?

The PMOS curve looks rotated 180 degrees around the origin. This means as Vgs increases (absolute value) the current goes to zero. In short, inverse behavior.

(b) For the same size NMOS and PMOS devices, what do you observe about the drain current values?

The PMOS's values are negative (prolly do to how they're measured, but more importantly they are much smaller. I would guess this has to do with the k' variable.

(c) Compare your simulation results with your prelab calculations. Are they the same or are they different. Explain your observations.

They are different, but in the prelab, we didn't do all of the calculations we simulated here. In the prelab (for the PMOS), we had V1 be negative values, but here V1 was positive and we simply relied on the fact that V2 would be greater for part of the simulation. Overall the behavior is the same, but the numbers are not because we don't use the same numbers.

Part 2: MOSFET resistance

Resistance can be measured by finding the slope of a V/I curve. AS we are plotting I-V curves we find the resistance as 1/slope at a particular point.

(a) On the NMOS I-V curve find the resistance of the MOSFET when VDS is 0.25V, 0.75V and 1.2V. Do this for various VGS values.
Complete the table below

VDS	VGS	Region of operation	Resistance (Ohms)
0.25	0.25	**cutoff**	**4975124.378**
0.25	0.75	**linear**	**1102.536**
0.25	1.2	**linear**	**224.215**
0.75	0.25	**cutoff**	**209205020.9**
0.75	0.75	**saturation**	**21505.376**
0.75	1.2	**linear**	**4444.444**
1.2	0.25	**cutoff**	**14836795.25**
1.2	0.75	**saturation**	**27624.309**
1.2	1.2	**saturation**	**9708.738**

TA Check Point: Complete Part 2 and demo the results to your TA

Question:
How does the resistance change with region of operation.
In the linear region, how does the resistance change with increasing VGS. Explain why.

The resistance gets smaller. This is because the resistance, up until sat mode, is influenced by the VGS voltage where more voltage = less resistance. In short, the channel conductance increases, so resistance decreases.

Part 3: MOSFET as a switch

A. NMOS switch

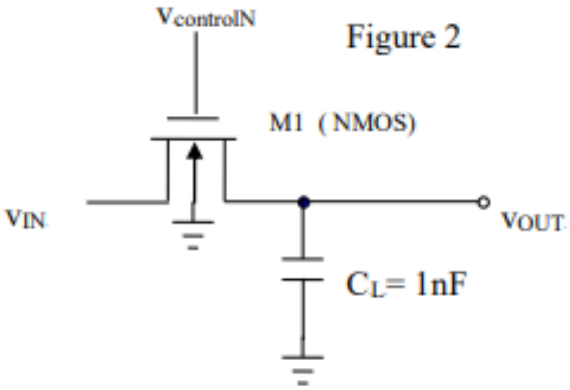

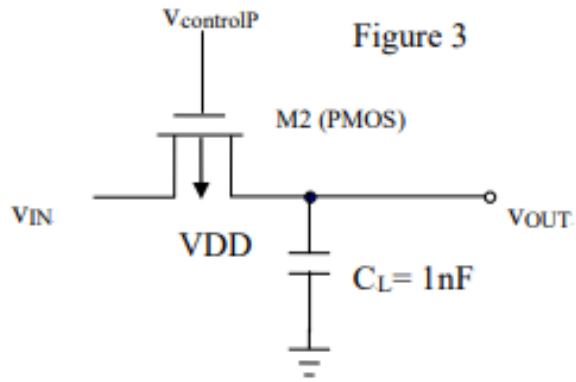

(a) Draw the MOS circuit given in Figure 2. Connect the bulk terminal to ground.
(b) Edit the MOSFET model for model parameters W=5µm, L=0.25µm.

(c) Connect a voltage source to the gate voltage $v_{controlN}$ which switches from 0V to VDD (1.2V). Set this up as a PWL source.

Definition PWL(t1 = 0 S, v1 = 0 V, t2 = 0.1 mS, v2=0 V, t3 = 0.10001 mS, v3 = 1.2 V, t4 = 4 mS, v4 = 1.2 V)

(d) The capacitor is 1nF. Set the initial condition on the capacitor at 0V.
(e) Connect the input voltage to a voltage source with a DC voltage = VDD=1.2V
(f) Run a transient simulation and plot input and output on one screen shot.
(g) Observe the voltage on the capacitor and explain the behavior.
(h) Change the input voltage to GND.
(i) Set the capacitor initial voltage to 1.2V
(j) Run a transient simulation and plot input and output on one screen shot.
(k) Observe the voltage on the capacitor and explain the behavior.

Input is 1.2V:

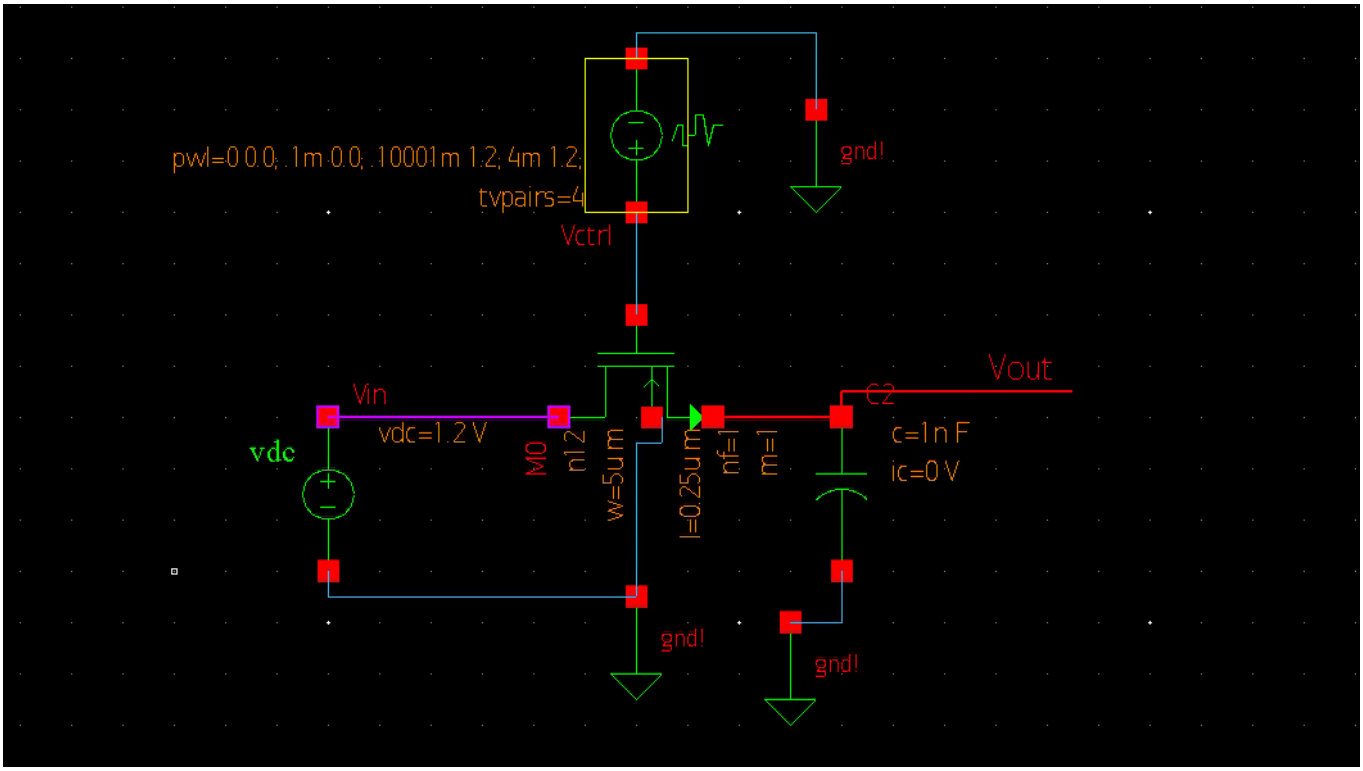
pwl=0 0.0; .1m 0.0; .10001m 1.2; 4m 1.2;
tvpairs=4
Vctrl
gnd!
Vin
vdc=1.2 V
vdc
M0
n12
w=5u m
l=0.25u m
nf=1
m=1
C2
c=1n F
ic=0 V
Vout
gnd!
gnd!

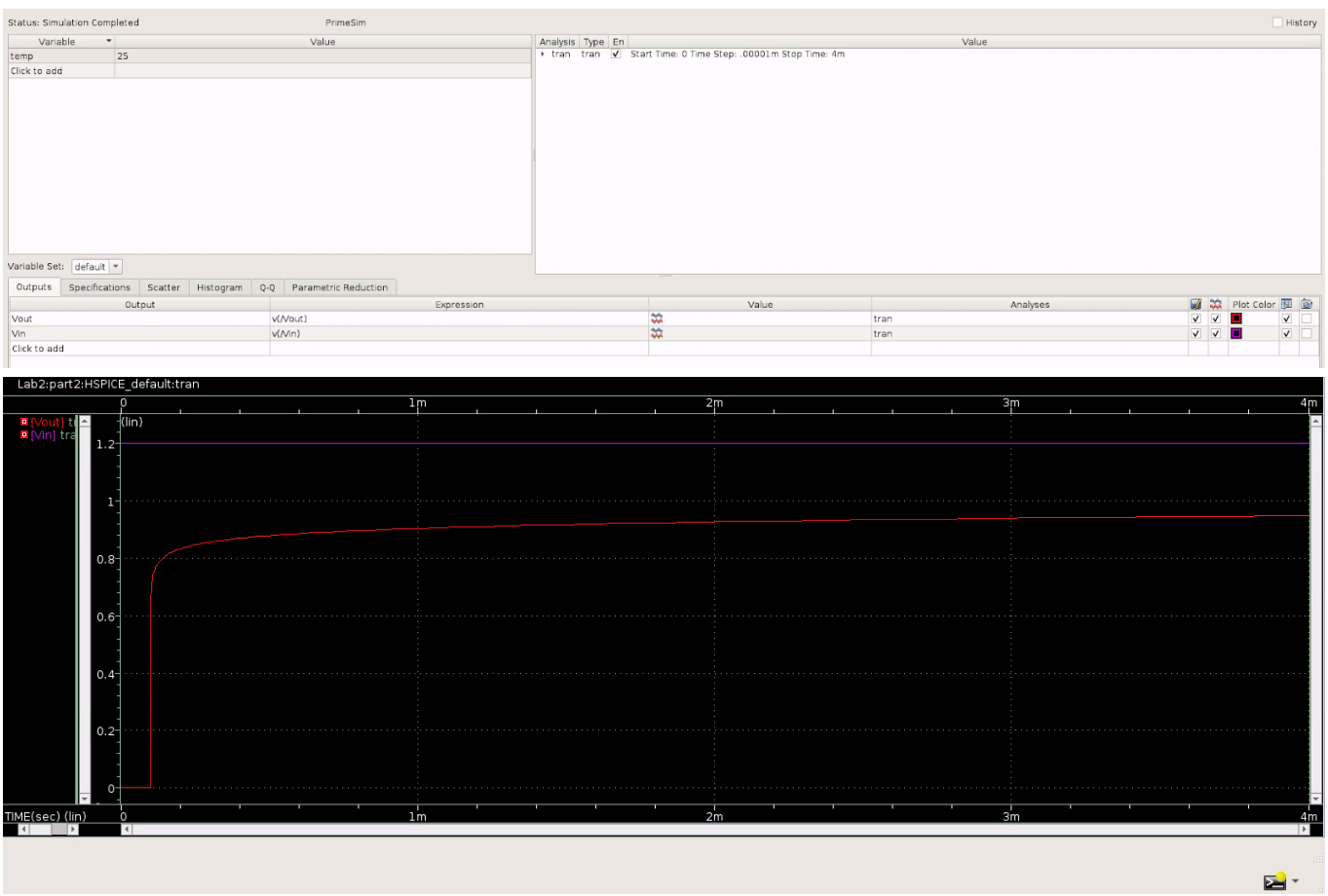
Status: Simulation Completed
PrimeSim
History
Variable
Value
temp
25
Click to add
Analysis
Type
En
Value
tran
tran
Start Time: 0 Time Step: .00001m Stop Time: 4m
Variable Set:
default
Outputs
Specifications
Scatter
Histogram
Q-Q
Parametric Reduction
Output
Expression
Value
Analyses
Plot Color
Vout
v(/Vout)
tran
Vin
v(/Vin)
tran
Click to add
Lab2:part2:HSPICE_default:tran
[Vout] tr
[Vin] tra
(lin)
1.2
1
0.8
0.6
0.4
0.2
0
0
1m
2m
3m
4m
TIME(sec) (lin)

The voltage stays low (microvalues) until the control switches to 1.2 Volts which turns the NMOS on. The cap then charges up to ~.9V and not 1.2V because an NMOS is a weak pullup.

Input is 0V:

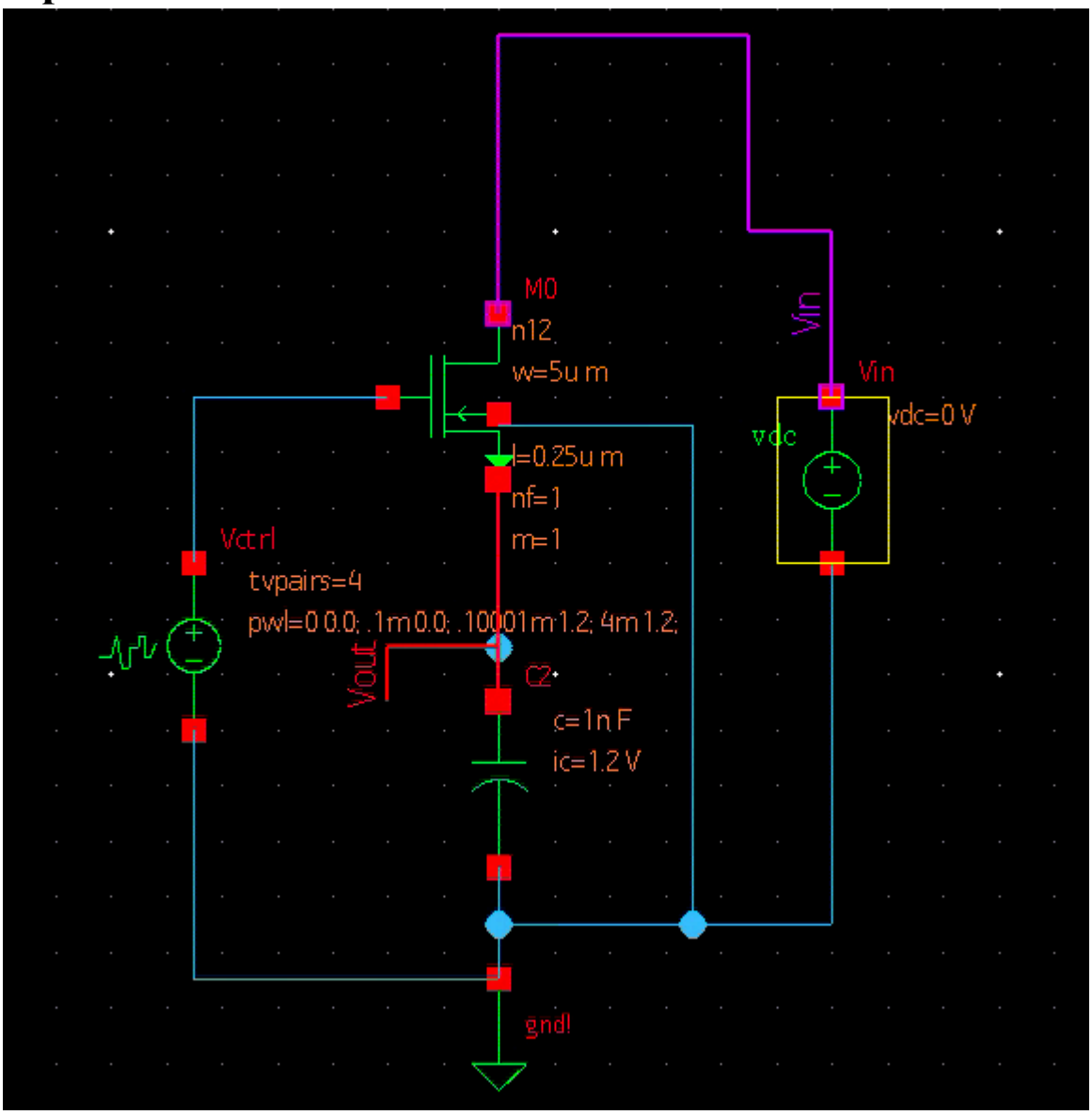

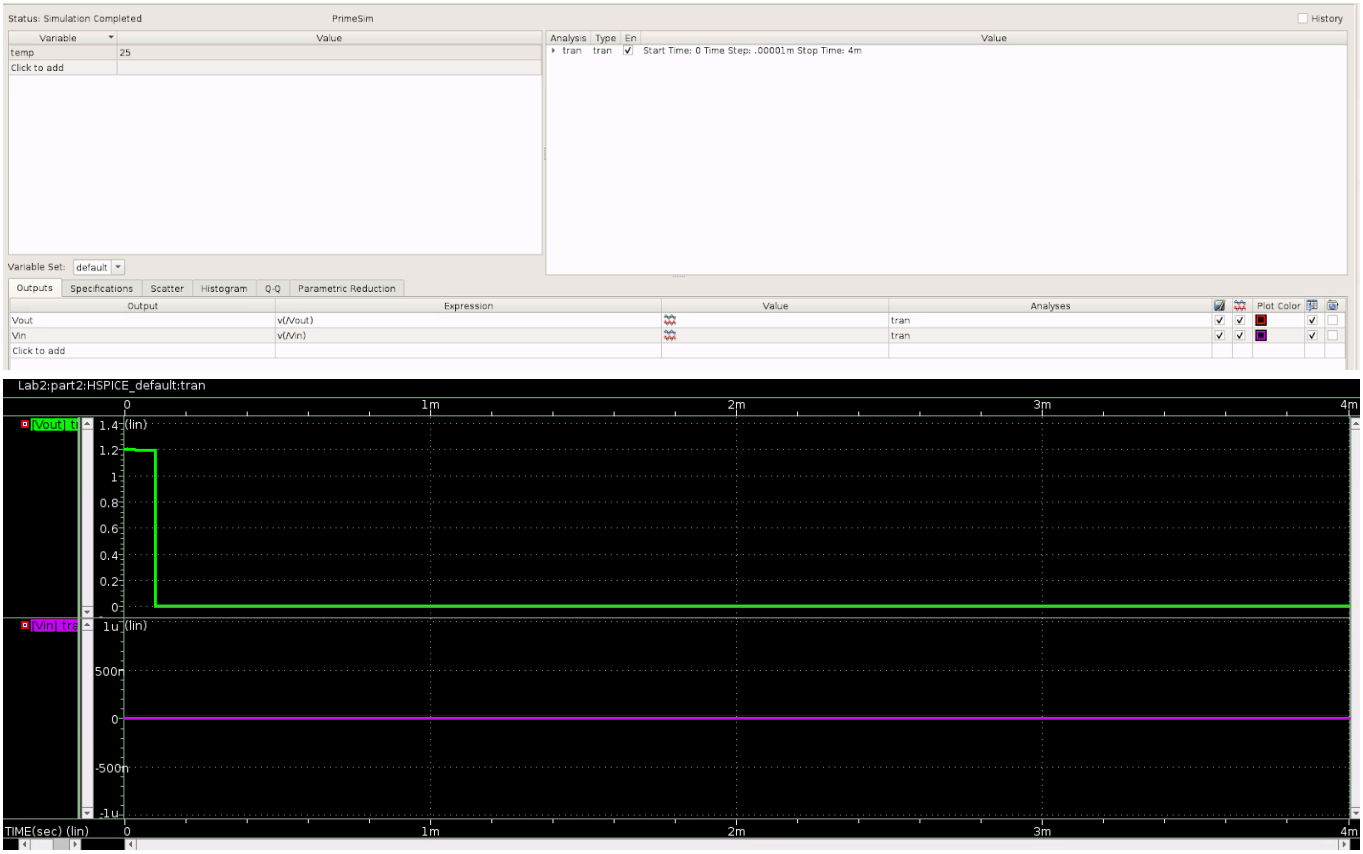

Here when the input is 0V, it's very easy to see the storing pull-down behavior of the NMOS. It jumps to 0V practically instantly.

B. <u>PMOS switch</u>

(a) Draw the MOS circuit given in Figure 3. Connect the bulk terminal to VDD.
(b) Edit the MOSFET model for model parameters W=5µm, L=0.25µm. (c) Connect VDD to a DC voltage source of 1.2V.
(d) Connect a voltage source to the gate voltage $v_{controlP}$ which switches from VDD (1.2V) to 0V. Set this up as a PWL source.

Definition PWL(t1 = 0 S, v1 = 1.2 V, t2 = 0.1 mS, v2=1.2 V, t3 = 0.10001 mS, v3 = 0 V, t4 = 4 mS, v4 = 0 V)

(e) The capacitor is 1nF. Set the initial condition on the capacitor at 0V.
(f) Connect the input voltage to a voltage source with a DC voltage = VDD=1.2V
(g) Run a transient simulation and plot input and output on one screen shot.
(h) Observe the voltage on the capacitor and explain the behavior.

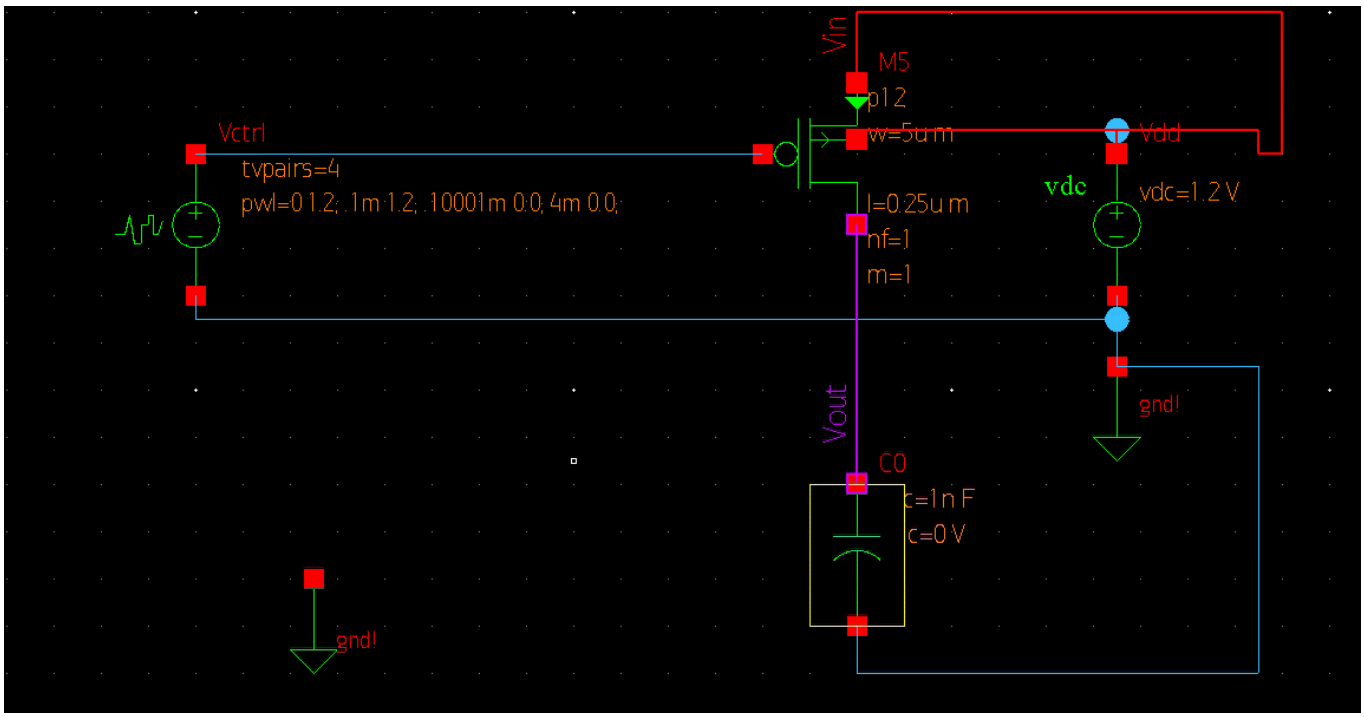

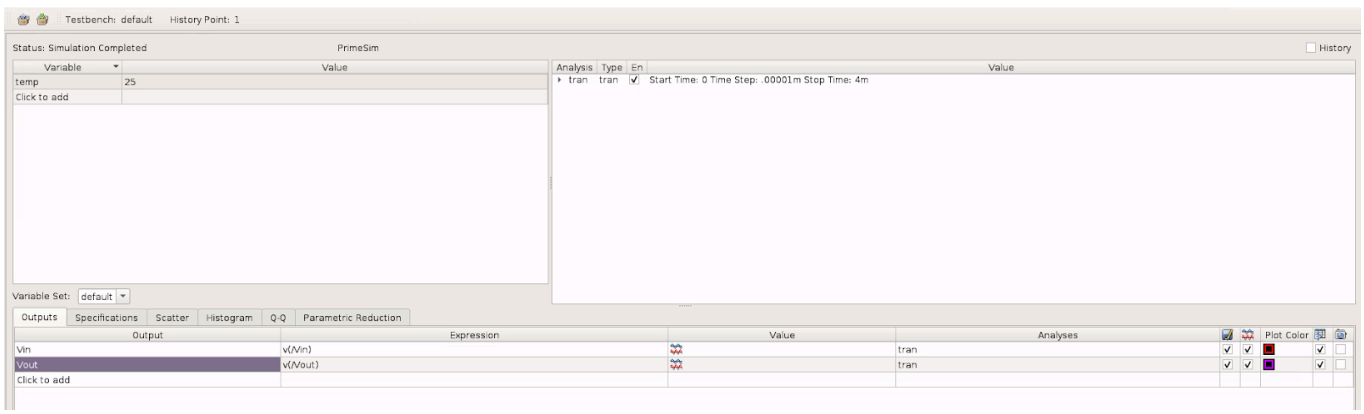

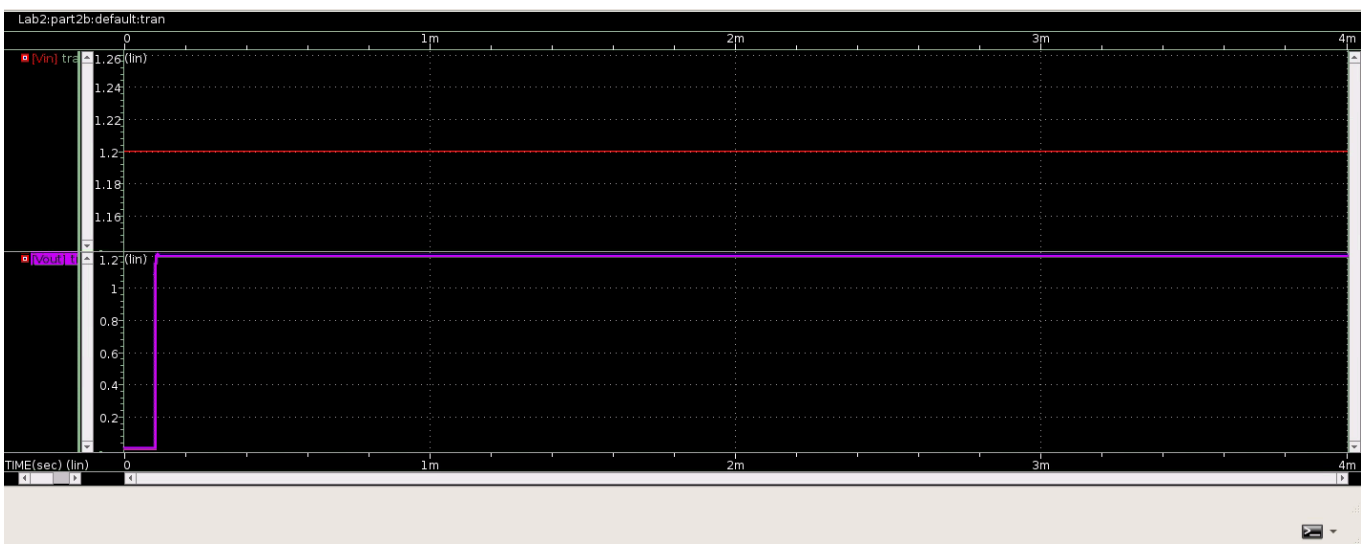

As we can see, the PMOS acts like a strong pullup when it turns on. Vout shoots almost instantly up to 1.2V.

(i) Change the input voltage to GND.
(j) Set the capacitor initial voltage to 1.2V.
(k) Run a transient simulation and plot input and output on one screen shot.
(l) Observe the voltage on the capacitor and explain the behavior.

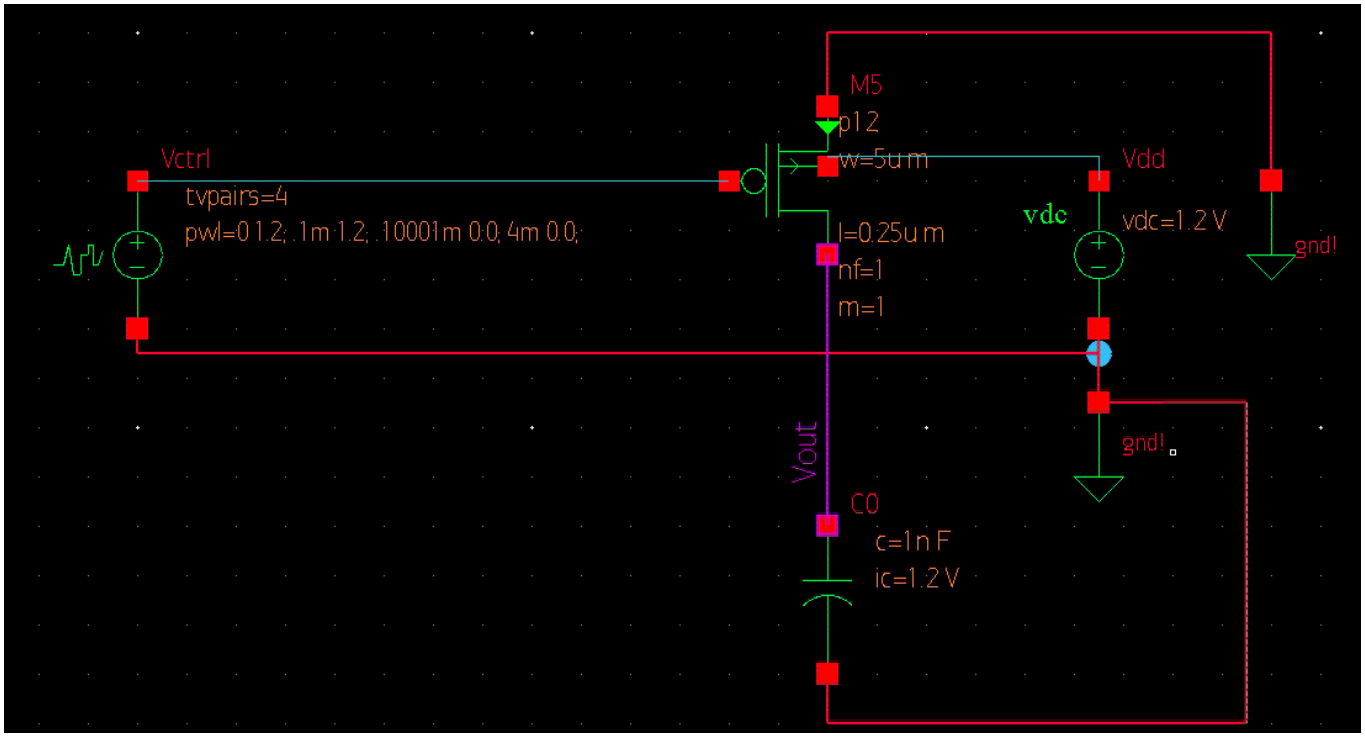

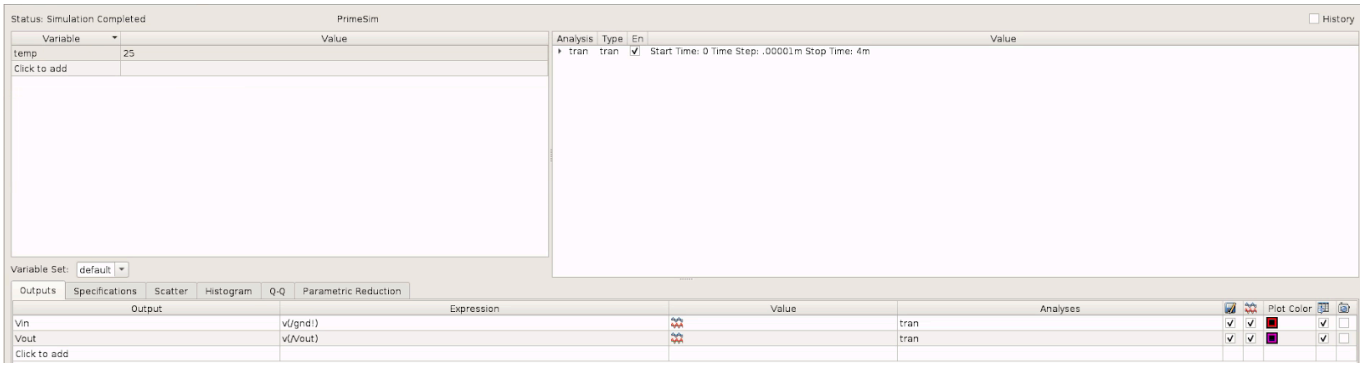

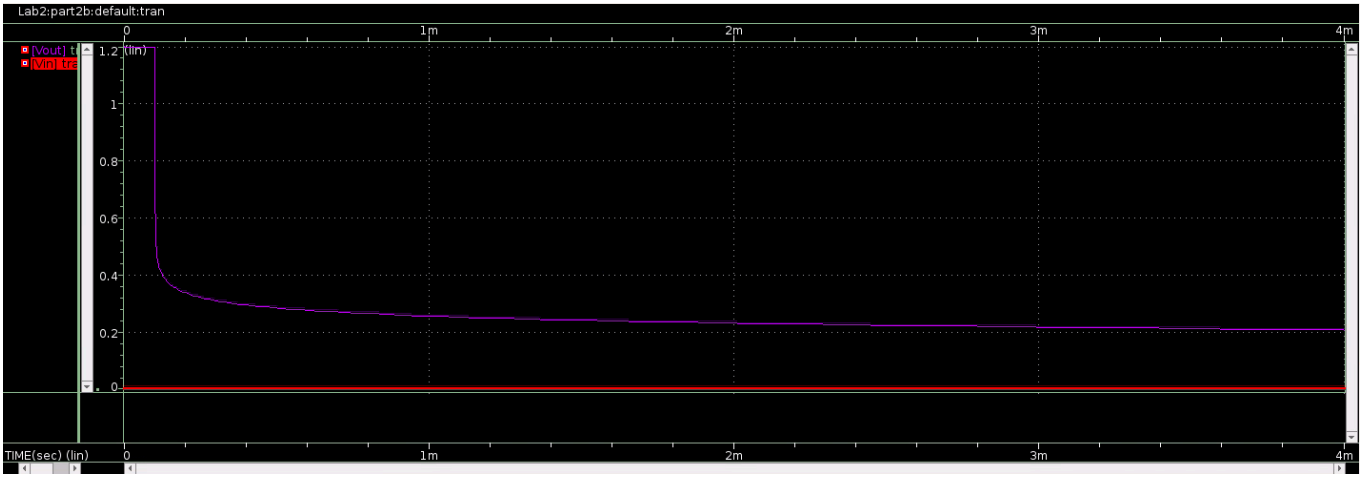

This time, we see the PMOS struggle to fully pull down. It mirrors the NMOS's pull up behavior. It never does fully discharge.

TA Check Point: Complete Part 3and demo the results to your TA

Question:
From the plots, comment on the pull-up and pull-down characteristics of the NMOS and PMOS devices.

From these plots we can see that a PMOS is a strong pullup and weak pull down, while the NMOS is a weak pull up and strong pull down.

IV. REPORT

Prepare a detailed report that includes all simulation results. The lab report should contain the following:

Schematic printout of the circuits.
Printout of simulation results.
Answers to questions in the prelab and laboratory procedure.